DI09 070M. 162 kW (220 hp)

IMO Tier II, EU Stage IIIA

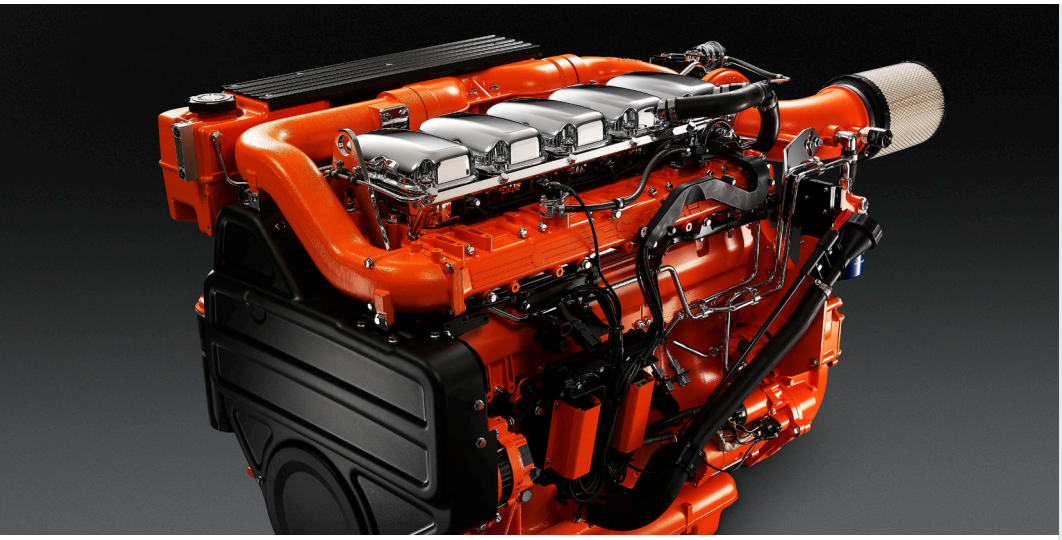

The marine engines from Scania are based on a robust design with a strength optimised cylinder block containing wet cylinder liners that can easily be exchanged. Individual cylinder heads with 4 valves per cylinder promotes repairability and fuel economy. The engines are type approved in all major classification societies.

The engine is equipped with a Scania developed Engine Management System, EMS, in order to ensure the control of all aspects related to engine performance. The injection system is based on electronically controlled unit injectors that gives low exhaust emissions with good fuel economy and a high torque already at low revs. The engine can be fitted with many accessories such as air cleaners, PTOs, transmissions and type approved instrumentation in order to suit a variety of installations.

	Rating	Engine speed (rpm)		
		1200	1500	1800
Gross power, full load (kW)	ICFN	162	162	162
Gross power, full load (hp, metric)	ICFN	220	220	220
Gross power, propeller curve (kW)	ICFN	59	103	162
Gross power, propeller curve (hp, metric)	ICFN	80	140	220
Gross torque (Nm)	ICFN	1289	1031	859
Spec fuel consumption. Full load (g/kWh)		203	195	204
Spec fuel consumption. 3/4 load (g/kWh)		204	200	212
Spec fuel consumption. 1/2 load (g/kWh)		212	211	230
Spec fuel consumption. Propeller curve (l/h)		15	25	39
Optimum fuel consumption (g/kWh)		193		
Heat rejection to coolant (kW)		123	117	130

ICFN – Continuous service: Rated power available 1 h/1 h.
Unlimited h/year service time at a load factor of 100%

Standard equipment

- Scania Engine Management System, EMS
- Unit injectors, PDE
- Turbocharger
- Fuel pre-filter with water separator
- Fuel filter
- Oil filter, full flow
- Centrifugal oil cleaner
- Oil cooler, integrated in block
- Oil filler, in engine block
- Oil dipstick, in block
- Starter, 2-pole 7.0 kW
- Alternator, 2-pole 100A
- Flywheel SAE 14
- Silumin flywheel housing, SAE 1 flange
- Front-mounted engine brackets
- Protection covers
- Closed crankcase ventilation
- Operator's manual

Engines with heat exchanger:

- Sea water pump
- Heat exchanger with expansion tank

Optional equipment

- Hydraulic pump
- Side-mounted PTO
- Front-mounted PTO
- Exhaust connections
- Electrical base system
- Control and instrument panels
- Accelerator position sensor
- Engine heater
- Power pack engine bracket
- Stiff rubber suspension
- Air cleaner
- Studs in flywheel housing
- Reversible fuel filter
- Low coolant level reaction
- Variable idle speed setting
- Low oil sump
- Long oil dipstick
- Oil level sensor
- Bilge pump

This specification may be revised without notice.

DI09 070M. 162 kW (220 hp)

IMO Tier II, EU Stage IIIA

Engine description

No of cylinders	5 in-line
Working principle	4-stroke
Firing order	1 - 2 - 4 - 5 - 3
Displacement	9.3 litres
Bore x stroke	130 x 140 mm
Compression ratio	18:1
Weight with heat exchanger with keel cooling	(excl oil and coolant) 1150 kg 1044 kg
Piston speed at 1500 rpm	7.0 m/s
Piston speed at 1800 rpm	8.4 m/s
Camshaft	High position alloy steel
Pistons	Aluminum pistons
Connection rods	I-section press forgings of alloy steel
Crankshaft	Alloy steel with hardened and polished bearing surfaces
Oil capacity	32-38 dm^3 (standard oil sump)
Electrical system	2-pole 24V

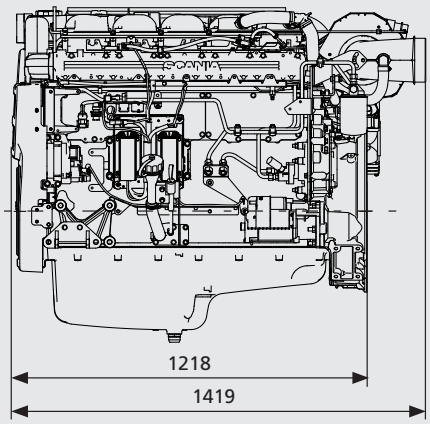

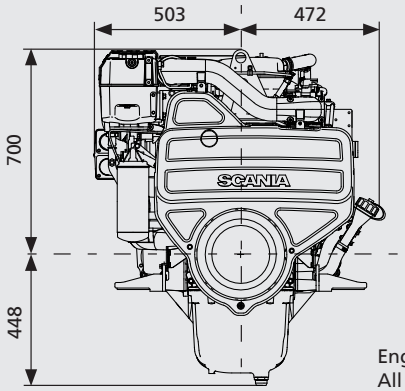

Engine with heat exchanger
All dimensions in mm

Output

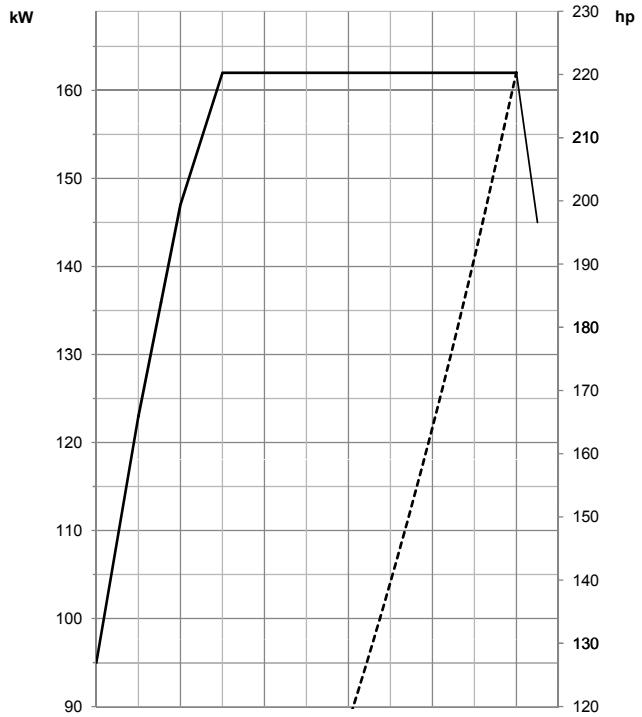

Torque

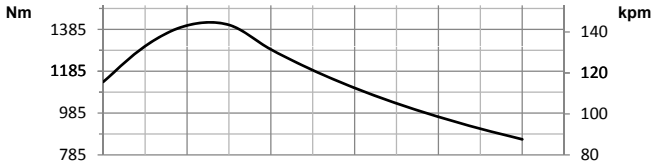

Spec fuel consumption

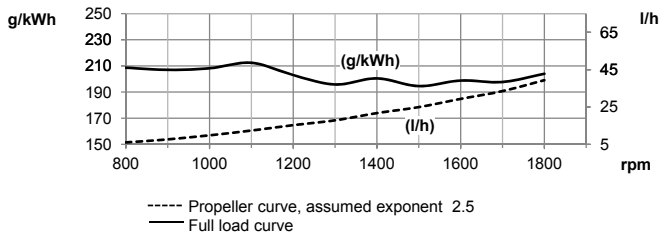

Test conditions Air temperature +25°C. Barometric pressure 100 kPa (750 mmHg). Humidity 30 %. Diesel fuel acc. to ECE R 24 Annex 6. Density of fuel 0.840 kg/dm^3. Viscosity of fuel 3.0 cSt at 40°C. Energy value 42700 kJ/kg.
Power test code ISO 3046. Power and fuel values +/-3%.

SCANIA

SE 151 87 Södertälje, Sweden
Telephone +46 8 553 810 00
Telefax +46 8 553 829 93
www.scania.com
engines@scania.com

Edition 03 © Scania CV AB, SE-151 87 Södertälje, Sweden